replacement parts industries, inc.
"The Alternate Source"®
CALL 800-221-9723 or 818-882-8611 • FAX 818-882-7028
E-MAIL: techsupport@rpiparts.com • WEBSITE: www.rpiparts.com

INSTALLATION INSTRUCTIONS

TOP COVER KIT
RPI Part #MIK196 fits M9
RPI Part #MIK197 fits M11

M9 COVER SHOWN HERE
(M11 COVER IS SLIGHTLY LARGER)

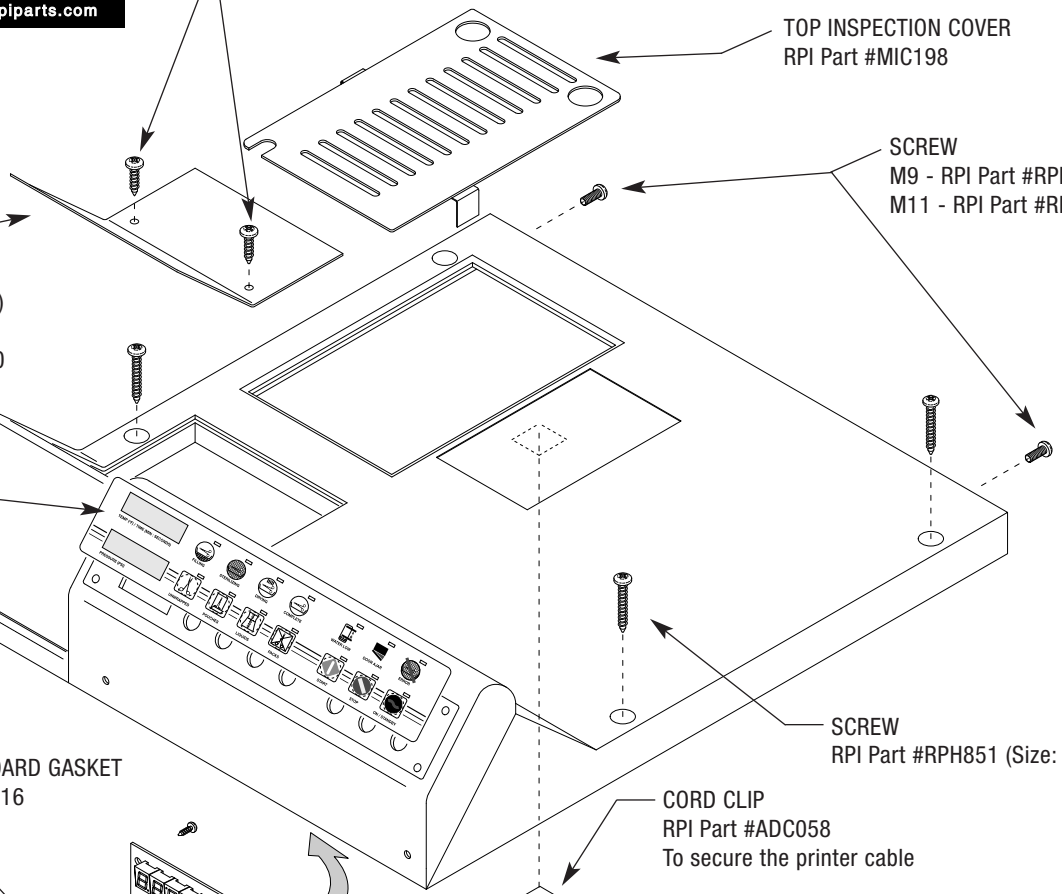

APPLIES TO M9 UNITS ONLY

Apply a bead of Silicone Sealant RTV108 (RPI Part #RPA874) or equivalent to prevent steam from damaging the display PC Board.

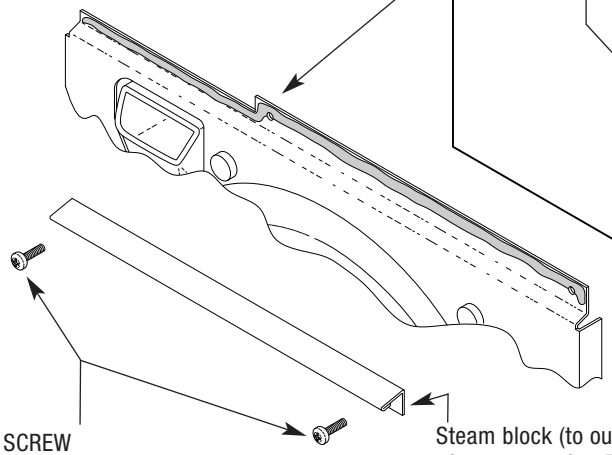

SCREW
RPI Part #RPH854 (Size: #10 x .63) x2

Steam block (to outside of top cover after RTV sealant is applied and cover is installed onto front panel).

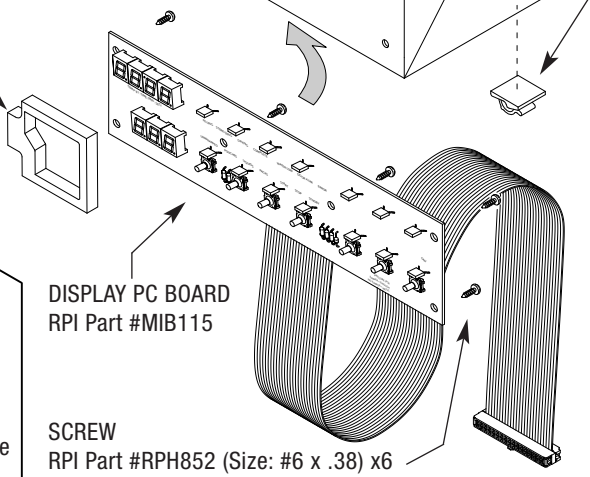

SCREW
RPI Part #RPH852 (Size: #6 x .38) x6

Note: Six self threading screws used to mount the disply PC Board to the inside of the top cover (earlier OEM versions have threaded inserts which require standard #6-32 x 3/8" long machine screws (included with RPI Part #MIB115).

APPLIES TO M11 UNITS ONLY

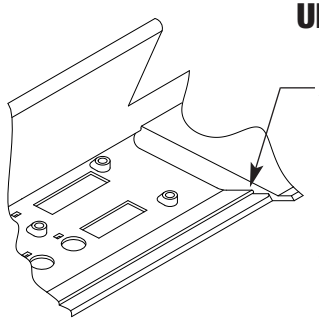

INSIDE OF TOP COVER SHOWN

Apply a bead of Silicone Sealant RTV108 (RPI Part #RPA874) or equivalent into the groove on the inside of the top cover that fits over the front panel (to prevent steam from damaging the Display PC Board).